JUMAC
SLIVER CANS

EXPERIENCE THE NEW

Handling Yarns with Care since 1974

www.jumaccans.com

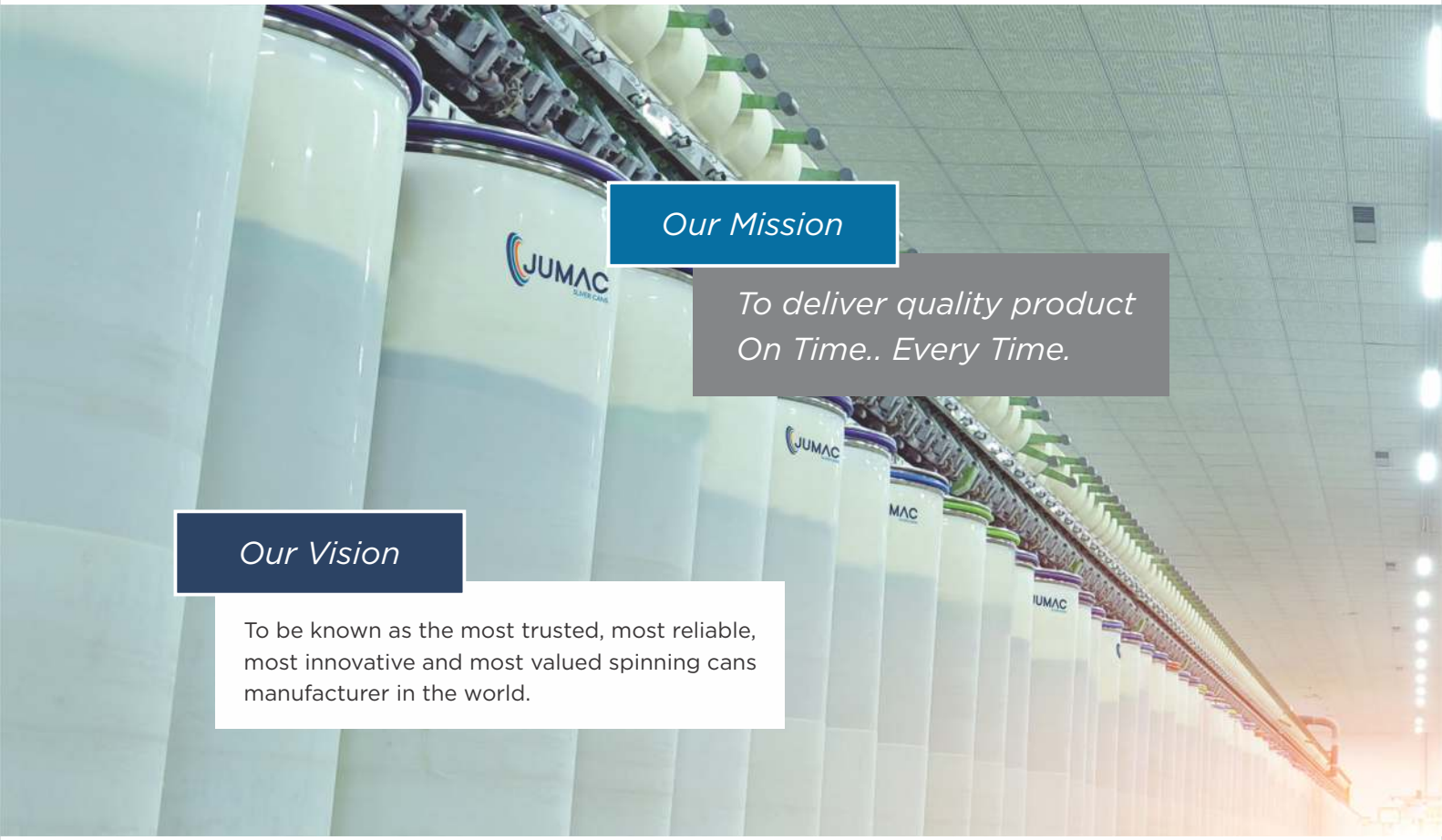

Our Mission

To deliver quality product On Time.. Every Time.

Our Vision

To be known as the most trusted, most reliable, most innovative and most valued spinning cans manufacturer in the world.

1973 — Jumac Manufacturing was incorporated to manufacture Fibre Cans for the Jute industry

1974 — Ventured into aluminium cans as per new demand of the industry

1988 — Diversified into HDPE Sliver cans for the textile industry

1995 — Started making Baxter flyers & Wharve body

1999 — Created presence and started exporting to Bangladesh, South Africa and Egypt

2000 — Participated in ITME Bombay, for the 1st time

2011 — Became a fully integrated unit with end to end in-house manufacturing

2012 — Expanded globally by reaching new markets like Vietnam, Indonesia, Pakistan & Turkey

2015 — Launched our 1200mm dia HDPE can

2016 — Presenting JUMAC in a new avatar. Multiplying Sliver Cans launched

JUMAC MANUFACTURING

Handling Yarns with Care since 1974.

JUMAC, pioneer's in spinning can manufacturing in India, was founded in the year 1974 with a mission to deliver quality cans, catering to the Jute & Textile Industry.

With superior quality being it's core philosophy, Jumac takes pride in it's most modern state-of-the-art manufacturing plant. The entire range of products and accessories are made in-house enabling full control & monitoring of the process.

As a founding member of the prestigious 'Fogla Group', Jumac has its presence in more than 18 countries spread across 5 continents.

Sharing the value of the nation's 'Make in India' initiative, Jumac leverages on Skill, Scale and Speed to create its future roadmap.

Sliver Cans

Every sliver can..Premium sliver can...

HDPE Spinning Cans

Jumac manufactures HDPE (High Density Poly Ethylne) spinning cans for the Textile Industry. Every can is of a standard & consistent quality. The complete range starting from 225mm upto 1200mm in diameter is available with us along with it's full range of accessories.

Cans used in all the sections of a spinning plant such as Carding, Draw frame, Comber, Open end & Rotors are available with us including the newly introduced 1200mm dia can.

The "Jumac"vantage

Jumac presents a new and diversified range of sliver handling systems to minimise imperfection in sliver handling.

Jumac cans comprising of virgin HDPE sheet hardened & tempered precision springs, dust & fluff free casters, standard stainless steel accessories and moulded plastic top & bottom covers ensure a uniform material handling system.

Accessories

Top Rim and Band

Available in both Stainless Steel (SS) / Galvanised (GP) options, Top Rims and Top Bands hold the cylinder firmly and prevent it from losing shape.

Bottom Rim and Plate

Galvanised (GP) Bottom Plate and Rims are made on heavy duty presses with special ribs and contours for additional strength and longer life.

Top and Bottom Covers

Moulded PPCP (Poly propylene copolymer) top and bottom covers are used with an anti-slippage surface to give a proper grip and surface without rupturing the sliver.

ABS option is also available to give more strength and longevity to the top cover.

Identification Bands

PVC based bands act as a shock absorber during bumping of cans and also helps to differentiate sliver counts during production.

An attractive range of colours acts as an excellent value addition for spinning cans.

Springs

The Heart of the CAN

Box Type Spring

Anti-rust and heat-treated, our springs are made from high carbon special steel wire that enable uniform load and movement during operations. Every single spring is individually calibrated to give longer and consistent life.

A minimum initial load is advisable for maintaining the desired sliver height especially for open end and rotor spinning.

Pantograph Spring

Electro-welded Mild Steel (MS) shutters in criss-cross (scissor) shape ensure uniform spring movement and maintain consistent sliver height. For sizes up to 24" plastic moulded covers and from 28" up to 48", Galvanised (GP) covers are used for zero tilting and proper balance of the sliver.

A spring hardened & tempered with care to retain the original sliver properties as desired by the spinning master.

Caster Wheels

Dust free.... Fluff free... Maintenance free...

A complete range of casters for spinning cans with a fluff-free design is available to provide smooth sliver handling on the floor. DD quality high pressed zinc coated body also ensures longer life. Wheel options in both PP (Poly propylene) and Nylon 6 are available as per customer requirement.

Durable Series

Particulars	DLPS	DLPR	DLPT
Wheel Diameter	60	60	60
Tread Width	25	25	25
Caster Height	83.5	85	78.5
Plate Size	84 X 70	92 X 60	116 x 60
Hole Distance	61 X 47	73 X 37	80 X 27, 62 x 27
Bolt Hole Dia	9 mm	7 mm	9mm
Load Capacity	70kgs	70kgs	70kgs

Pioneer Series

Particulars	2.5"	2.5" (U)	3"	3" (SLOT)
Wheel Diameter	65	65	80	80
Tread Width	25	25	25	25
Caster Height	84	85	105	105
Plate Size	75 X 87	75 x 87	101 x 85	101 x 85
Hole Distance	74 X 38	63 x 48	74 x 57	80 x 55
Bolt Hole Dia	7mm	8mm	8mm	18 x 9
Load Capacity	75kgs	75kgs	120kgs	120kgs

Supremo Series

The *"Ever Clean"* Casters

Particulars	65mm	80mm
Wheel Diameter	62	82
Tread Width	27	35
Caster Height	83	130
Plate Size	89 x 74	98 x 82 x 6.5
Hole Distance	68 x 43	74 x 56
Bolt Hole Dia	14.5 x 7.5 mm (Elongated)	14.5 x 7.5 mm (Elongated)
Load Capacity	80kgs	130kgs

Sliver Can Size (mm)		Sliver Can Size (inch)			Spring Resistance 5% Weights in kgs				
Diameter	Height	Diameter	Height	MM.	Combed Cotton	Cotton & Viscose	Blends	Man made Fibre	Initial Load
400	900	16"	36"	914	11.5	8.0	7.0	5.7	4.5
	1000		40"	1016	13.5	9.5	9.0	7.5	
445-450	900	18"	36"	914	15.5	11.0	8.0	7.0	5.5
	1000		40"	1016	17.5	12.0	9.0	8.0	
	1070		42"	1067	19.0	13.5	9.5	8.5	
	1100		44"	1118	19.5	14.0	10.0	9.0	
	1150		45"	1143	20.0	14.5	10.5	9.0	
	1200		48"	1220	21.0	15.5	11.0	9.5	
470	1070	18.5"	42"	1067	20.0	15.5	13.5	11.5	5.5
	1100		44"	1118	21.0	16.0	14.0	12.0	
	1150		45"	1143	22.0	17.0	15.0	12.5	
	1200		48"	1220	22.5	18.0	15.5	13.0	
500	900	20"	36"	914	20.0	15.5	13.0	12.0	6
	1000		40"	1016	21.0	16.5	14.0	12.5	
	1070		42"	1067	22.0	17.0	15.0	13.0	
	1100		44"	1118	23.0	17.5	15.5	13.0	
	1150		45"	1143	24.0	18.5	16.5	13.5	
	1200		48"	1220	24.5	19.5	17.0	14.5	
600	900	24"	36"	914	29.5	24.0	20.5	17.5	8
	1000		40"	1016	31.0	24.5	21.5	18.5	
	1070		42"	1067	31.5	25.5	22.5	19.5	
	1100		44"	1118	33.0	26.5	23.5	20.0	
	1150		45"	1143	34.0	27.5	24.0	20.5	
	1200		48"	1220	35.5	28.0	24.5	21.0	
	1270		50"	1270	38.0	29.5	25.5	22.0	
	1300				39.5	30.0	26.0	22.5	
800	1000	32"	40"	1016		33.5		24.5	10
	1070		42"	1067		35.0		25.5	
	1100		44"	1118		36.0		26.5	
	1150		45"	1143		37.0		27.0	
	1200		48"	1220		38.5		27.5	
	1270		50"	1270		40.5		28.5	
	1300					41.5		29.0	
900	1000	36"	40"	1016		39.5		30.0	11
	1070		42"	1067		42.0		31.0	
	1100		44"	1118		43.0		31.5	
	1150		45"	1143		44.5		32.5	
	1200		48"	1220		46.0		33.5	
	1270		50"	1270		47.5		35.0	
	1300					48.5		35.0	
1000	1000	40"	40"	1016		46.0		34.5	12
	1070		42"	1067		48.0		36.0	
	1100		44"	1118		49.5		37.0	
	1150		45"	1143		51.0		38.5	
	1200		48"	1220		53.0		39.5	
	1270		50"	1270		55.0		41.5	
	1300					56.5		42.5	
	1500			1500		65.0		50.0	
1200	1200	48"	48"	1220					
	1300		52"	1320					
	1500		60"	1520					

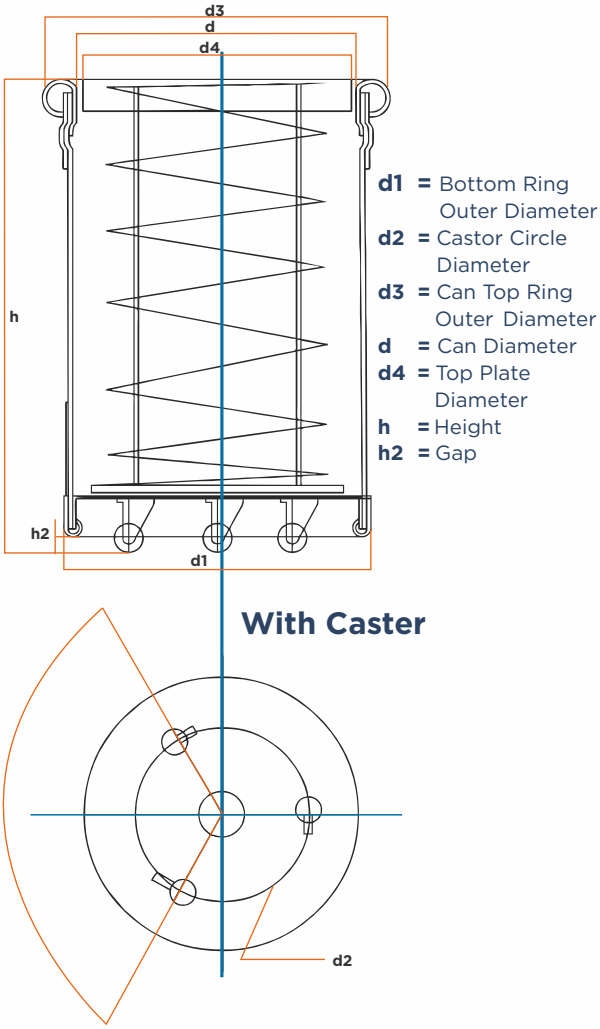

With Caster

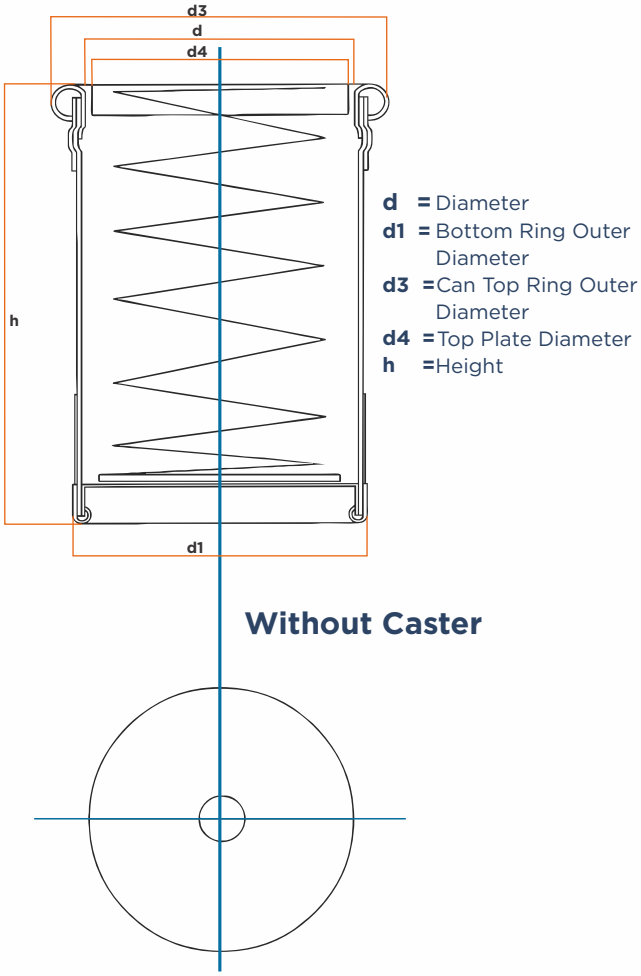

Without Caster

SPECIAL CANS

Perforated Cans

Perforated HDPE cans are available in the size range of 600 to 1000 mm for process houses in the dyeing, bleaching and other special applications.manage speed up to 3800 rpm.

Bump Press Cans

We also make Bump Press Cans - a highly specialised & customised item having a niche application in the wool & wool combing unit's.

HDPE Shade Card

Glance through the shade card available for our HDPE spinning cans.

Standard Regular Colours (Available all time).

Milky White
JM 01

Orange
JM 02

Parrot Green
JM 03

Sky Blue
JM 04

Royal Blue
JM 05

Red
JM 06

Golden Yellow
JM 07

Natural
JM 08

Lemon Yellow
JM 09

Rose Pink
JM 10

Colours on Demand (Minimum Order: 200 set cans).

Baby Pink
JM 11

Sea Green
JM 12

Dark Green
JM 13

Ivory
JM 14

Mehendi Green
JM 15

Violet
JM 16

Blue
JM 17

Maroon
JM 18

Ash
JM 19

Chocolate Brown
JM 20

Also available in our newly introduced Pantone/Pastel colour shades (Minimum Order: 200 set cans).

Pastel Pink
JM 21

Pastel Yellow
JM 22

Peach
JM 23

Pastel Blue
JM 24

Pista Green
JM 25

Aluminium Sliver Cans

Used in the Jute Industry as they are fire retardant, Aluminium Sliver Cans are strong and sturdy to withstand rough handling on the mill floor. A complete range from 12” to 24” is available in standard thickness and height as per customer needs.

Jumac alone serves more than 70% market share covering 40 out of 56 operational mills in West Bengal along with other states including Andhra Pradesh, Telangana, Bihar and Assam.

Accessories

The complete range from 10” to 24” in standard thickness is available in MS (Mild Steel) grade material for Top Ring, Bottom Ring, and Bottom Plate. It is meant for supply to the can repair and replacement market.

Baxter Flyers

Baxter flyers or Tubular flyers can run on machines with speed up to 4800 rpm whereas two-legged flyers could manage speed up to 3800 rpm.

JUMAC is one of the leading manufacturers of Baxter Flyers and enjoys a substantial market share.

Advantages:

I) Increase in efficiency by at least 15%

ii) Reduced yarn breakages

iii) Less hairiness of the yarn

iv) Improved yarn quality of higher count

Infrastructure

Jumac has world class state-of-the-art facility with in-house capability of manufacturing of all products and accessories. This enables us to ensure superior quality delivery at the best prices. Our machines are calibrated regularly and always kept up and running.

From manufacturing to delivery, our staffs are trained with the best practices in global manufacturing to ensure no loss of quality in product in the entire process. We abide by safety norms in protecting our staff from accidents in the facility.

Research & Innovations

Innovation is at the helm of Jumac. We are continuously striving towards innovating new products in our industry to enable our clients increase their productivity at lesser options and cost. From springs, casters to cans, we always have something new to offer.

Quality Policy

Jumac, a global name in spinning can manufacturing, is committed towards delivering world-class products through superior manufacturing facility and process driven approach.

We achieve this position through scientific innovation, continuous improvement, customer satisfaction and working under effective Quality Management system that meets global standards.

Notes

Eastern India's leading business conglomerate

Fogla group – a leading conglomerate headquartered in Kolkata, India has multiple interests in Woven Sack Bags, Chemicals, Fertilizers, Jute & Machinery Spares, Detergents and many other product categories.

With a team of over 2000 employees, an annual turnover of more than INR 2500 Cr, 12 manufacturing units in 5 different locations across India, the group has emerged as the market leader in Spinning Cans, LABSA, Fertilizers & Woven Sack Bags. Currently, it exports to more than 56 countries across 5 continents.

For more information, visit: **www.foglagroup.com**

Jumac Manufacturing Private Limited
21, Chittaranjan Avenue,
Kolkata, India - 700 072.

E-mail: jumac@foglagroup.com
Website: www.jumaccans.com
Tel: +91 33 2537 7700, +91 33 2237 6055